nanni diesel

energy in blue

Kubota BASE

4.340 TDI

95,7 kW (130 hp)

Technical Specifications

Power	**95,7 kW (130 hp)**
Maximum RPM	**2600 RPM**
Displacement	**202.54 ci (3319 cc)**
N° of cylinders	**4 in line**
Bore / Stroke	**3.86x4.33" (98x110 mm)**
Compression Ratio	**21,8 / 1**
Injection	**Indirect (E-TVCS)**
Intake	**Turbo intercooler**
Cooling System	**Heath Exchanger**
Alternator	**12 V 100 A**
Instrument Panel	**C 3 luxe**
Transmission	**Hydraulical**
Weight (incl trans)	**815.9 lb (370 kg)**

Hose Diameters

Exhaust	**4" (104 mm)**
Fuel	**0.32" (8 mm)**
Sea Water	**1.12" (32 mm)**
Engine Max Install. Angle	**15°**

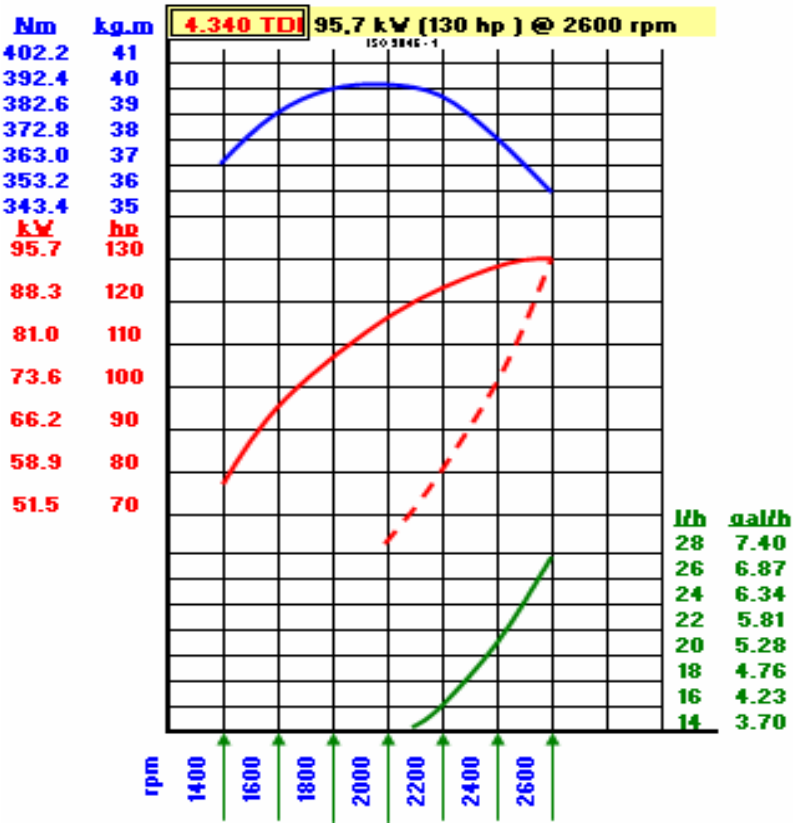

NANNI DIESEL recommends MOTUL

nannidiesel

energy in blue

4.340 TDI

Kubota BASE

Line drawings

4.340 TDI / ZF 45A

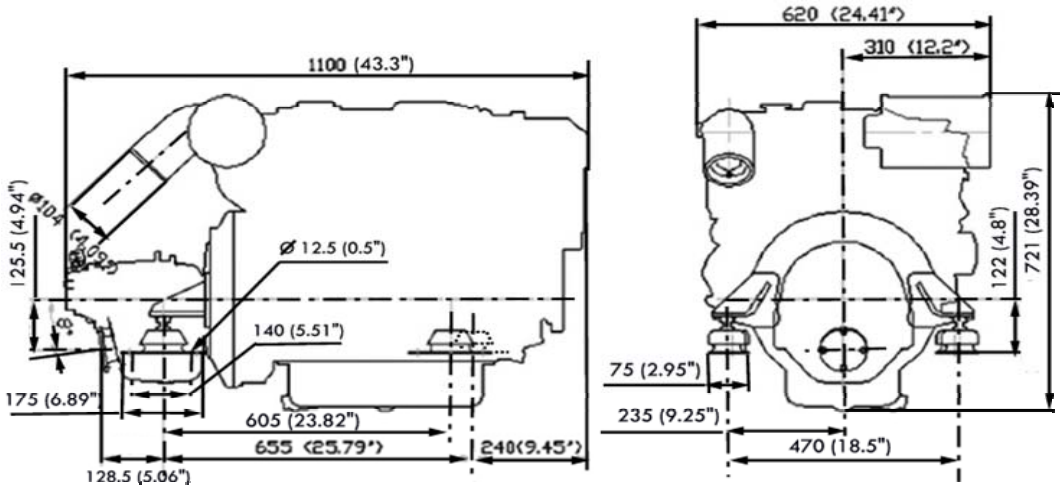

Standard Equipment

- C 3 luxe Instrument Panel
  - _Tachometer / hourmeter
  - _Oil Pressure Warning Light & Audio Alarm
  - _Water T° Warning Light & Audio Alarm
  - _Battery Charge
  - _Glow Plugs
  - _Water temperature indicator
  - _Battery charge indicator
  - _Oil pressure indicator
  - _Starter Key
- Hydraulical Transmission
- Prearrangemt for cable use
- Egine Mounts
- Owners Manual
- Warranty Certificate

(270 x 188 mm)

10 x 7.4"

- Electrical Harness 13' (4m)
- Heath Exchanger
- Fresh Water Pump
- Thermostat
- Sea Water Pump
- Fresh Water Cooled Exhaust Manifold
- Exhaust Manifold With Water Injection
- Turbo Compressor
- In Line Injection Pump
- Fuel Pump
- Fuel Filter
- Oil Filter
- Extraction Oil Pump
- Electrical Wiring 12 V
- Electrical Stop

Optional

- Bipolar Electrical Wiring
- Power Take-Off
- Coupling
- Propeller shaft
- Exhaust System
- Remote Control
- Sea Water Hoses
- Fuel Hoses
- Sea Water Filter
- Angled or V transmission
- Additional alternators
- Trolling valve

A R PEACHMENT

Riverside Estate,
Brundall, Norwich, NR13 5PL
Tel: 01603 714077
Fax: 01603 712211
e-mail: sales@peachment.co.uk

The engine shown above could be different from the standard producton engine. Engine specifications can be modified without prior notice.
Specifications are for pleasure applications only. For any other application contact us.